Manitowoc®

Lift Solutions™

Carry Deck / Boom Truck/Truck Mount/Rough Terrain

Reference Guide

Shady Grove, PA

What is a Lift Solution?

The Shady Grove Lift Solutions Team is a group of dedicated professionals consisting of Engineers, Administrators and Crane Care personnel to assist our customers with customized applications for their Manitowoc Crane products. Whether a new production or existing fielded unit, we will work together to provide you factory-approved solutions based on your special application requirements.

IS

- New application development
- Customization of existing product
- Customer supplied attachment
- Re-rates
- Lift application analysis
- Structural modification
- Custom Load Charts
- Technical Letters

IS NOT

- Structural repair
- Day-to-Day research on legacy items
- Obsolete parts
- Solutions for field quality, code and safety issues

Manitowoc Cranes recognizes that no two jobs are the same, and that no two cranes are the same either. With that in mind, our team will work very hard to help you configure your crane to meet your individual application requirements, making your Manitowoc Crane the best tool for the job.
The following pages illustrate many examples of previous Lift Solutions and the related categories of engineering effort. If you wish to discuss an item shown in this guide, a possible variation of an existing solution, or a totally unique customized application, contact your authorized Manitowoc dealer or our Shady Grove Lift Solutions team directly at…

(717) 593-5503

sgliftsolutions@manitowoc.com

Lift Solutions™

Lift Solutions Team, Shady Grove

Left to right:
Greg Warren – Lift Solutions Manager
Joshua Hoffman- Applications Engineer
Brian Mulhollem – Applications Engineer
Carla Carbaugh – Crane CARE Administrator
Taylor Hockenberry – Applications Engineer
Tim Houck – Applications Engineer

Lift Solutions Categories

Category	Description	Charge
A	Engineering and/or Technical Letter summarizing existing data. Expedient completion expected.	No Charge
B	Engineering and/or Technical Letter requiring analysis/data generation, 8 hours effort or less. Completion time to be determined	No Charge
C	Engineering customization and/or analysis requiring more than 8 hours effort, drawing and/or chart generation. Completion time to be determined.	Customer charge per price quote
D	Lift Solutions involving parts orders. Completion time to be determined.	Customer charge per price quote

*For questions, please contact our local dealer or the Lift Solutions Team with specific product requirements.

Category A

No Charge Technical – Existing Info / Analysis

- Letters of Compliance
- Crane Travel Restrictions / Conditions (Example Below)
- Emissions Compliance Info

Manitowoc

Name
Director, Product Safety
Grove U.S. L.L.C.
1565 Buchanan Trail East, PO Box 21
Shady Grove, PA 17256-0021
T 717 593 5234 F 717 593 2146
xxx..xxxxx@manitowoc.com

*** Via Email ***

Date

Customer Name
Attn:
Email:

Dear Name:

Subject: Crane Model, Serial Number & multiple S/Ns

National cranes are designed, manufactured, tested and intended to be operated with reference to applicable requirements of the crane industry and national consensus standards (e.g., American Standard ASME B30.5, CSA Z-150, PCSA Standards No. 2 and No. 4, SAE Standards and Recommended Practices, et al) certain of which are incorporated by reference into various governmental regulations. It should be noted that the user of a National crane (i.e., the Employer/Employee) is responsible for compliance with the literal requirements of governmental safety regulations.

In response to your revised wind speed deviation request, Manitowoc provides the following application approval based on normal slickline and modified slickline operations.

Normal Slickline Operation:
Crane configuration – 71 ft. boom length, maximum 25 ft. radius, single part line and multiple tag lines secure load which is maintained 20 ft. above ground level. Load is 45 ft. long and on average 9-5/8 inch diameter. Load is hung vertically from a 2 legged sling/bridal. Total rated load equals 4,839 lbs. (All lifting gear is included; ref. picture attached).

- The Normal Slickline Operation is permissible:
  - Wind speed up to 32 mph in ambient temperature not less than -25°F (-32°C) or
  - Wind speed up to 30 mph in ambient temperature not less than -30°F (-34°C)

Modified Slickline Operation:
Crane configuration – 71 ft. boom length, maximum 25 ft. radius, single part line and multiple tag lines secure load which is maintained 20 ft. above ground level. (All lifting gear is included; ref. picture attached).

Grove Manitowoc National Crane Potain

2- Date

average 9-5/8 inch diameter. Load is hung
uals 2,446 lbs.

d on average 9-5/8 inch diameter. Load is
Total rated load equals 2,784 lbs.

ssible for either first/second lift condition:
nt temperature not less than -40°F (-40°C).

ng operation and use of National Cranes are
fety Handbook and other manuals provided

nel working on and around the crane are
operational functions of the crane and safe
ld be thoroughly familiar with regulations and
n. Work practices may vary slightly between
ocal and job-site rules and employer policies
ith all relevant work rules is necessary.

ot hesitate to contact us.

Category B

No Charge Technical – New Info / Analysis (8 hours or less)

- Lift Approval Letters (Example Below)

Manitowoc

Name
Director, Product Safety
Grove U.S. L.L.C.
1565 Buchanan Trail East, PO Box 21
Shady Grove, PA 17256-0021
T 717 593 5234 F 717 593 2146
xxx.xxxxxxx@manitowoc.com

Date

Name
Company
Address
City State, Zip

Dear Name:

Subject: Crane Model, Serial Number XXXXXX– Application Lift Approval

Grove cranes are designed, manufactured, tested and intended to be operated with reference to applicable requirements of crane industry and national consensus standards (e.g., American National Standard ASME B30.5, PCSA Standards No. 2 and No. 4, SAE Standards and Recommended Practices, et al) certain of which are incorporated by reference into various United States Department of labor Occupational Safety and Health Act (OSHA) Rules and Regulations. OSHA Rules and Regulations relative to crane operations are specifically cited in Title 29, Code of Federal Regulations (CFR), Parts 1910 and 1926, Sections 180 and Subpart CC (i.e. 29CFR1910.180 – Crawler locomotive and truck cranes and 29CFR1926, Sub Part CC – Cranes and Derricks in Construction). Grove cranes meet the intent of OSHA to the extent applicable when they are utilized in accordance with the requirements therein published. It should be noted that the user of a Grove crane (i.e., the Employee/Employee) is responsible for compliance with the literal requirements of the OSH-Act.

In response to your request, utilizing subject crane to perform this special lift is permissible under the following guidelines and procedure:

- Tires must be inflated to their proper inflation pressure for general travel,
- With crane on fully extended outriggers, boom length 40 ft.; lift load of 40,000 lbs. off truck at 30 ft. radius,
- Fully retract boom to 36 ft. boom length,
- Boom up to 12 ft. radius,
- Center boom over front of crane and secure load from swinging,
- Retract outrigger jack cylinders simultaneously and maintain a level carrier until crane is on rubber tires,
- Raise outrigger pads 4-6 in. off the ground to clear any obstruction during travel,
- Maintain outrigger beams fully extended,
- Travel must be conducted with the assistance of a ground person to warn the operator of any changing conditions in the terrain being traversed,

Grove Manitowoc National Crane Potain

Date

igger jack cylinders to raise crane on
ntacting the ground,

oom down to a 30 ft. radius lowering load

e utmost diligence and care to ensure the
and/or working around the crane.
in the Operator's and Safety Handbook and
ion.

operation and use of Grove Cranes are
Handbook and other manuals provided
st make sure that all personnel working on
horoughly familiar with operational
rk practices. Personnel should be
rds governing cranes and their operation.
nment regulations, industry standards, local
rough knowledge of and compliance with all

hesitate to contact us.

Name
Director, Product Safety

xxx / IPC xxxxx

Lift Solutions™

Category C

Engineering / Analysis that generates Drawings or Charts (More than 8 hours effort)

- Crane Re-Rates (Example Below)
- Certification Packages (Russia / GOST; NYC; Australia, etc.)

Manitowoc

Name
Director, Product Safety
Grove U.S. L.L.C.
1565 Buchanan Trail East, PO Box 21
Shady Grove, PA 17256-0021
T 717 593 5234 F 717 593 2146
xxxxx.xxx@manitowoc.com

Date:

Company Name Here
Attention: Name
123 Address RD
City, State Zip

Dear Name:

Subject: Field Rerate —Model # *SIN*, to Model #

Authority to rerate crane model (Model), serial number XXXXXX (150 ton maximum rated capacity), to (Model), serial number XXXXXX (145 ton maximum rated capacity), is granted.

The following modifications and tests are required to accomplish the rerate. The necessary hardware, software and related instructions may be obtained by contacting Manitowoc's Crane Care Department.

1. **New Load Chart to Reflect:**
   MODEL - 85% Stability on Outriggers (36'-110' Boom)
   - 75% Stability on Rubber (36'-110' Boom)
2. **New Name Plate:**
   Use 7-679-100089 to read Model, S/N XXXXXX
3. **Manuals:**
   Complete set of MODEL Manuals (e.g., Operators & Safety Handbook, Service Manuals, Parts Manual, etc.) unless crane is in possession of proper manuals.
4. **Owners CD:**
   If an Owners CD was issued for this machine, it will need to be replaced with an updated version.
5. **Decals:**
   a) Product ID Decal (Model) – Use BOM # (2 each)
   b) Transportation & Lifting Data Decal (Model) - Use BOM # (1 each)

   Refer to the Decal Installation within the subject crane's Parts Manual to ensure that all appropriate decals are installed at their respective locations and that all decals are legible.

Grove Manitowoc National Crane Potain

DATE

T RCL system augmented by an anti-two
n. These are required to be in proper
nge model ID on EKS/ECOS display

sted to the extent necessary to ensure
be carefully examined and repaired,

nechanisms (hoists)
mechanisms (lift cylinders)
on (e.g. telescopic) mechanisms

ti-two block and control lever lockouts
ure satisfactory calibration and

ons and tests as outlined herein. No
ffect the capacity of safe operation of the
written approval. A letter, signed and dated
e returned to Manitowoc's Shady Grove
s of the date of this letter as a verification
e performed with satisfactory results and
te have been destroyed and replaced with
fmore time is needed, please advise. Upon
cognize your crane as being an (Model).

ecessary, please do not hesitate to contact

Director, Product Safety

cc: Crane History File

XXX / IPC XXXXXX

Lift Solutions™

Category D

Lift Solutions involving significant Design & Documentation and/or Parts Sales

	Page
3-Color Custom Paint	10
Air Intake Shutdown	11
Auger	12
Auto-Lube System	13
Barge Chart	14
Boom Dolly	15
Boom Position Indicator Light	16
Bumper	17
Component Deductions & Special Configuration	18
Custom Control Arrangement	19
Custom Decals	20
Custom-sized Truck Beds and Torsion Boxes	21
Driveline Retarder	22
Fire Suppression System	23
Hose Reels/ Tool Circuits	24
Jib Alignment Device	25
Language Translations for Decals and Charts	26
Light Tower Kit	27
Main/Auxiliary Hoist Cameras	28
Cribbing Rack	29
Outrigger Jack Floats	30
Pedestal Mount	31
Pin-N-Go	32

Continued:

	Page
Pole Grab	33
Spark Arrestors	34
Synthetic Crane Hoist Line	35
Tag Axle	36
Tele Regen Kit (Thermal Contraction)	37
Tool Boxes/ Storage Solutions	38
Track Units	39
Wind Speed Indicator	40
Work Area Definition System with Limit Lockout	41
Work Range Limiter Kit for Mentor	42
Available Ready-To-Go Kits	43

3-Color Custom Paint

Description

Customized paint up to three colors to make any crane personalized.

Products

For All Model Cranes

Reference LS# & Documented Models

304181-(RT880E), 305105 & 304805-(TMS9000E), 303170-(YB4409XL), 305181-(YB7725)

Air and Fuel Intake Shutdown

Description

A valve system that provides emergency over speed shutdown protection for diesel engines. The values completely block the engine air intake system, cutting off an uncontrolled external fuel source and the air required to keep the engine running.

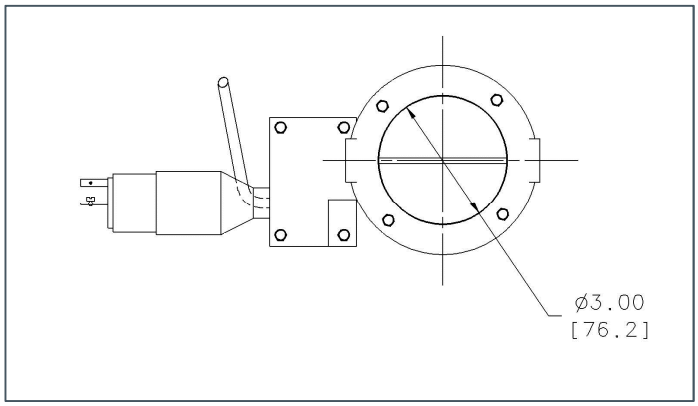

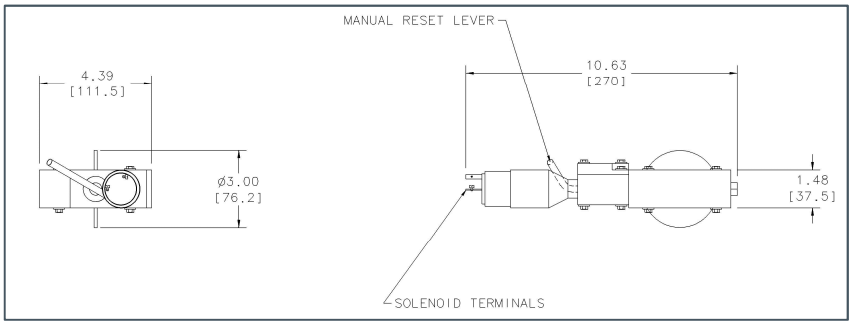

Products

RT / TMS / Industrial

Reference LS# & Documented Models

543696-(RT880E), 546616-(RT770E), 543694-(RT765E-2), 303387-(YB4411)

Note: Reference available kits page.

Auger

Description

Boom mounted attachment for vertical drilling and digging applications.

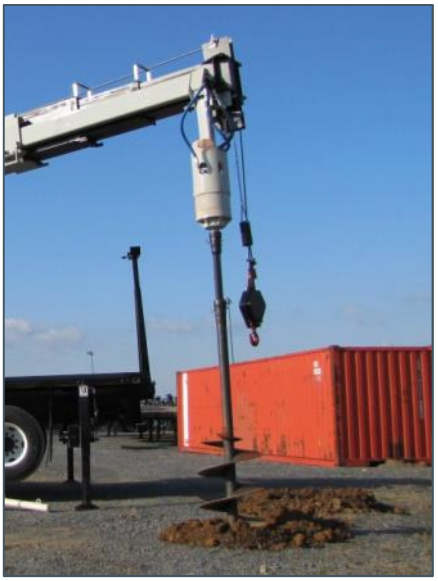

Products

Boom Truck

Reference LS# & Documented Models

306018-(800D), Multiple National Models

Auto-Lube Systems

Description

A lubrication system that includes an automatic pump with a reservoir, and grease delivery lines to frequent lube points on any crane.

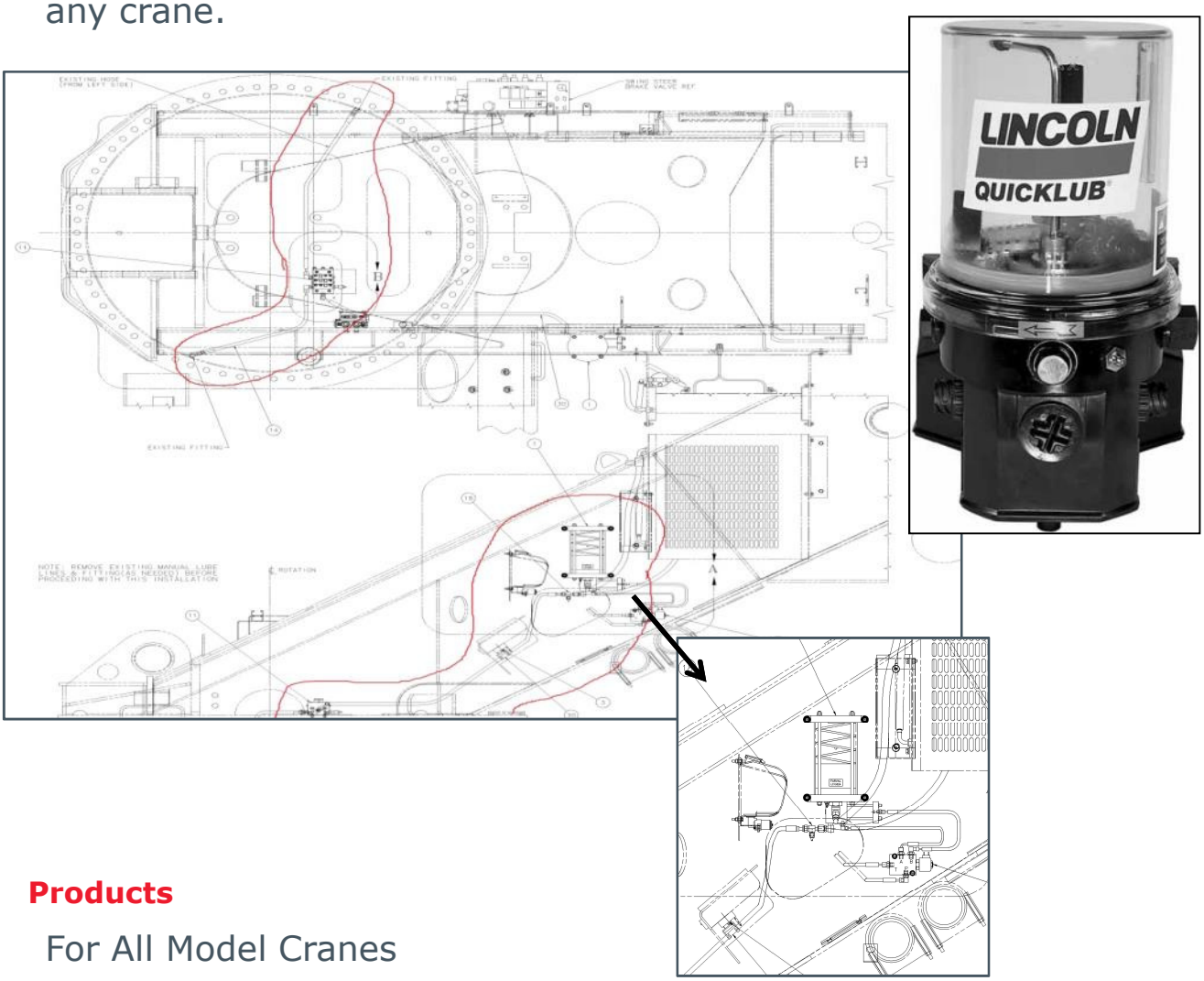

Products

For All Model Cranes

Reference LS# & Documented Models

545213-(RT530E-2), 305175 & 304778-(RT880E)

Note: Reference available kits page.

Barge Charts

Description

A special load chart with reduced ratings based on body of water and expected degrees of list. Reduces structural and stability load per Seastate standards.

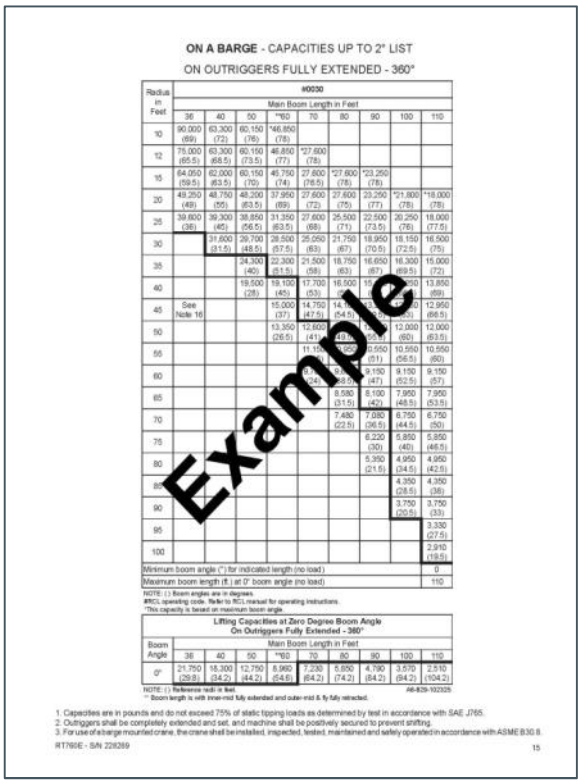

ON A BARGE - CAPACITIES UP TO 2° LIST
ON OUTRIGGERS FULLY EXTENDED - 360°

Radius in Feet	#0030								
	Main Boom Length in Feet								
	36	40	50	**60	70	80	90	100	110
10	90,000 (69)	63,300 (72)	60,150 (76)	*46,850 (78)					
12	75,000 (65.5)	63,300 (68.5)	60,150 (73.5)	46,850 (77)	*27,600 (78)				
15	64,050 (59.5)	62,000 (63.5)	60,150 (70)	45,750 (74)	27,600 (76.5)	*27,600 (78)	*23,250 (78)		
20	49,250 (49)	48,750 (55)	48,200 (63.5)	37,950 (69)	27,600 (72)	27,600 (75)	23,250 (77)	*21,800 (78)	*18,000 (78)
25	39,600 (38)	39,300 (45)	38,850 (56.5)	31,350 (63.5)	27,600 (68)	25,500 (71)	22,500 (73.5)	20,250 (76)	18,000 (77.5)
30		31,600 (31.5)	29,700 (48.5)	26,500 (57.5)	25,050 (63)	21,750 (67)	18,950 (70.5)	18,150 (72.5)	16,500 (75)
35			24,300 (40)	22,300 (51.5)	21,500 (58)	18,750 (63)	16,650 (67)	16,300 (69.5)	15,000 (72)
40			19,500 (28)	19,100 (45)	17,700 (53)	16,500 [illegible]	[illegible]	[illegible]	13,850 (69)
45	See Note 16			15,000 (37)	14,750 (47.5)	[illegible]	[illegible]	[illegible]	12,950 (66.5)
50				13,350 (28.5)	12,600 [illegible]	[illegible]	[illegible]	12,000 (60)	12,000 (63.5)
55					11,150 [illegible]	[illegible]	8,550 (51)	10,550 (56.5)	10,550 (60)
60					[illegible]	[illegible]	9,150 (47)	9,150 (52.5)	9,150 (57)
65						8,580 (31.5)	8,100 (42)	7,950 (48.5)	7,950 (53.5)
70						7,480 (22.5)	7,080 (36.5)	6,750 (44.5)	6,750 (50)
75							6,220 (30)	5,850 (40)	5,850 (46.5)
80							5,350 (21.5)	4,950 (34.5)	4,950 (42.5)
[illegible]								4,350 (28.5)	4,350 (36)
90								3,750 (20.5)	3,750 (33)
95									3,330 (27.5)
100									2,910 (19.5)
Minimum boom angle (°) for indicated length (no load)									0
Maximum boom length (ft.) at 0° boom angle (no load)									110

NOTE: ( ): Boom angles are in degrees.
#RCL operating code. Refer to RCL manual for operating instructions.
*This capacity is based on maximum boom angle.

Lifting Capacities at Zero Degree Boom Angle On Outriggers Fully Extended - 360°

Boom Angle	Main Boom Length in Feet								
	36	40	50	**60	70	80	90	100	110
0°	21,750 (29.8)	18,300 (34.2)	12,750 (44.2)	8,960 (54.6)	7,230 (64.2)	5,850 (74.2)	4,790 (84.2)	3,570 (94.2)	2,510 (104.2)

NOTE: ( ): Reference radii in feet. A6-829-102325
** Boom length is with inner-mid fully extended and outer-mid & fly fully retracted.

1. Capacities are in pounds and do not exceed 75% of static tipping loads as determined by test in accordance with SAE J765.
2. Outriggers shall be completely extended and set, and machine shall be positively secured to prevent shifting.
3. For use of a barge mounted crane, the crane shall be installed, inspected, tested, maintained and safely operated in accordance with ASME B30.8.

RT760E - S/N 228289 15

Example

Products

For All Model Cranes

Reference LS# & Documented Models

545136-(RT600E), 544961-(RT760E), 545111-(RT990), 545667-(TMS800E), 546184-(YB4411)

Boom Dolly

Description

Each Boom Dolly is fully engineered to meet the crane manufacturer's specifications and customer requirements. Allows for machine weight distribution for over the road travel and meets DOT close coupled laws.

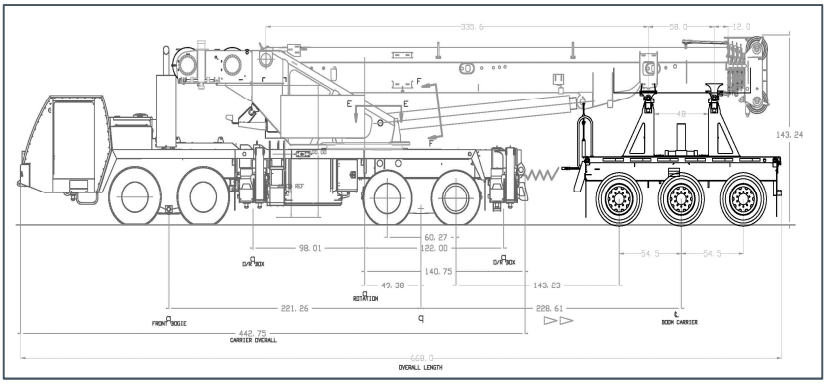

Products

TMS

Reference (Aftermarket) LS# & Documented Models

543947-(TMS750B), 545712-(TMS9000E)

Boom Position Indicator Light

Description

Solar-powered beacon light with universal mounting at boom tip, joined with Anemometer. Red beacon is Dusk-to-Dawn operating, with hundreds of settable flash patterns. Solar battery with 10+ days run time with no sun, and gimbal mount design allows upright position regardless of boom angle. Equipped with manual on/off switch on unit. Installs in minutes.

Products

RT

Reference (Aftermarket) LS# & Documented Models

548064

Note: Whole goods price list option on RT765E-2 through RT9130E

Bumper

Description

Heavy-duty bumper for crane frame protection for rough terrain job sites.

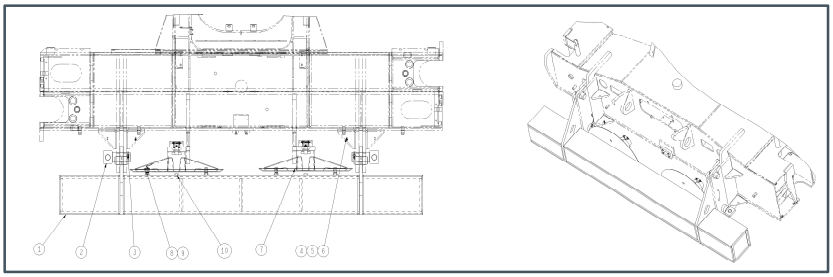

Products

RT

Reference LS# & Documented Models

305957-(RT530E-2), 306148-(RT890E), 302985-(RT9000E)

Component Deductions & Special Configuration

Description

Removal of hydraulic reservior, hydraulic pump, torison box, ASH rear stabilizers, outriggers, etc.

Manitowoc

Manitowoc Cranes
1565 Buchanan Trail East, PO Box 21
Shady Grove, PA 17256-0021
T 717 593 5503
sgliftsolutions@manitowoc.com

LIFT SOLUTION QUOTE NO: EXAMPLE	**DATE:**
Dealer:	**Dealer No:**
Salesperson:	
Phone:	**E-mail:**
Model:	**Serial No:**
Request:	**PO#**

Qty.	Part No.	Description	Net Price
1		DELETE HYD PUMP	
1		DELETE HYD RESERVOIR	

Estimated Lead Time: Estimated xx months after receipt of Purchase Order. Subject to Prior Sale. Firm date to be determined at time of receipt of Purchase Order.

Quote Validity: 30 Days

Terms: Ex-Works Shady Grove, PA, USA

Attachments/Comments:

Lift Solutions

Note: Lift Solutions may utilize one or more components that are "one time purchase" items and may not have passed thru Manitowoc's approval process for serial production parts.

Products

Boom Truck

Reference LS# & Documented Models

306136, 303606-(400B), 305388-(500E2), 304020-(600E2)

Custom Control Arrangement

Description

Arrange telescopic foot pedal functions including joystick and control valve changes to fit any job. Non-standard placement of controls must include safety and warning decals. Must comply with all acquirable safety regulations.

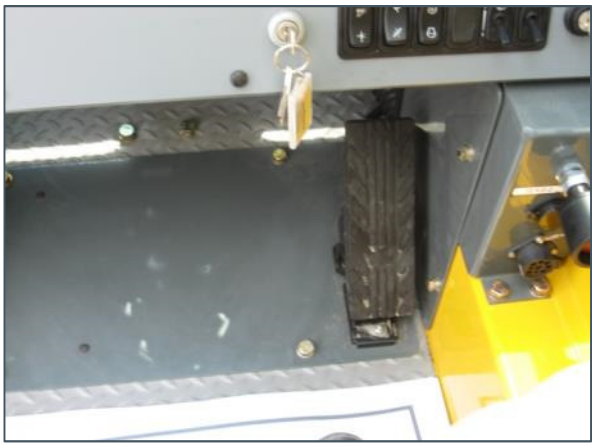

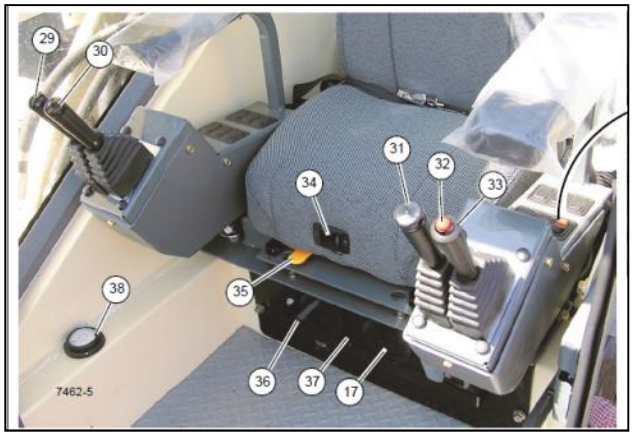

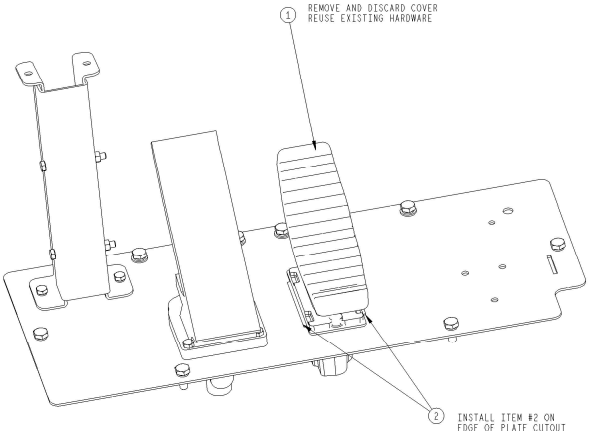

Products

For All Models

Reference LS# & Documented Models

547258-(RT522B), 547323-(RT650E), 547306-(RT890E), 545179-(1800)

Custom Decals

Description

Custom shapes, colors, text and graphics. Must not interfere with any safety or operational decals.

Products

For All Model Cranes

Reference LS# & Documented Models

305957-(RT530E-2), 305956-(RT765E-2), 544632-(YB4409)

Note: Installation of customer supplied decals is available.

Custom-sized Truck Beds and Torsion Boxes

Description

Customized truck beds and torsion boxes designed to meet customer needs. Must remain DOT compliant.

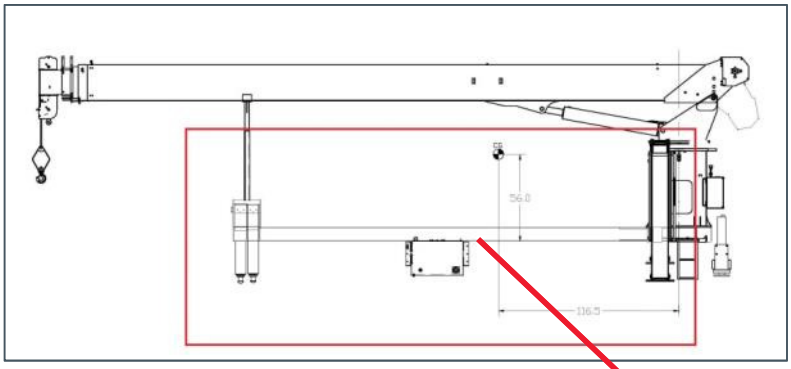

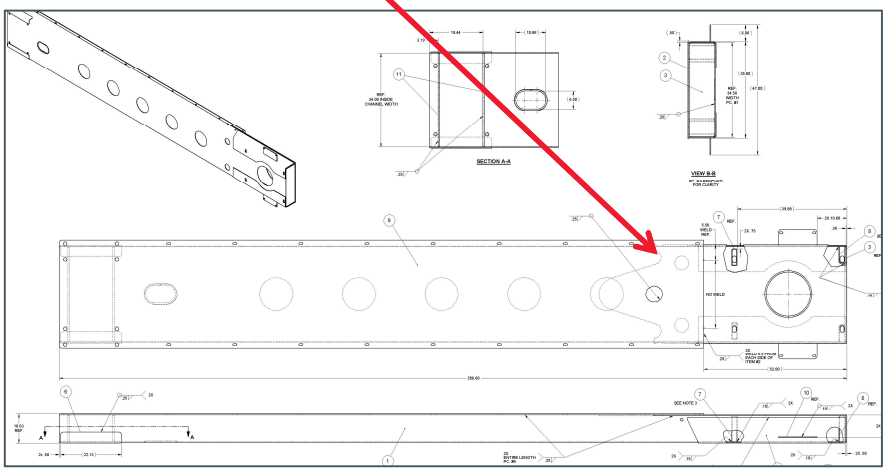

Products

Boom Truck

Reference LS# & Documented Models

306054-(400B), 305710-(600H), 306018-(800D)

Driveline Retarder

Description

Electromagnetic induction to provide a limiting force and placed on the driveline to retard power to drive system during operation.

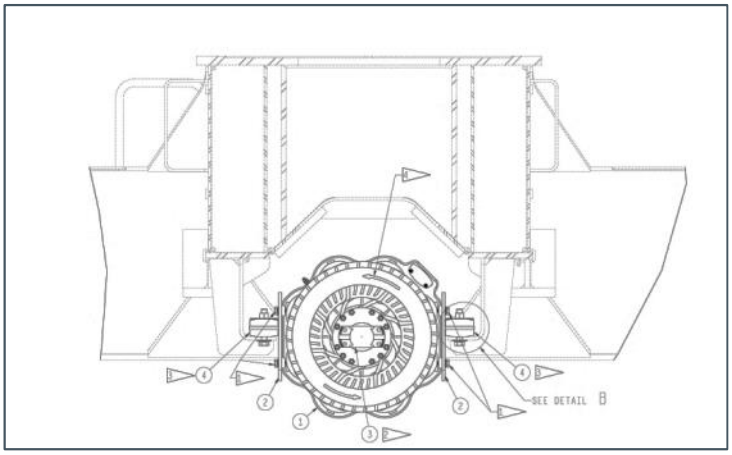

Products

RT

Reference LS# & Documented Models

303239-(RT880E), 304875-(RT890E), 547507-(RT9130E-2)

Fire Suppression Systems

Description

Governed by codes under the NFPA. Combination of dry chemicals and/or wet agents to suppress equipment fires.

Products

For All Model Cranes

Reference LS# & Documented Models

303444, 303875, 304556-(RT9130E),
304585, 306578-(RT9130E-2)

Hose Reels/ Tool Circuits

Description

Hose Reel is mounted to the side of boom and supplies hydraulic oil to the cranes tool circuit applications.
Common Tool Applications: Roofers Package/Clam Shell, Pole Grabs

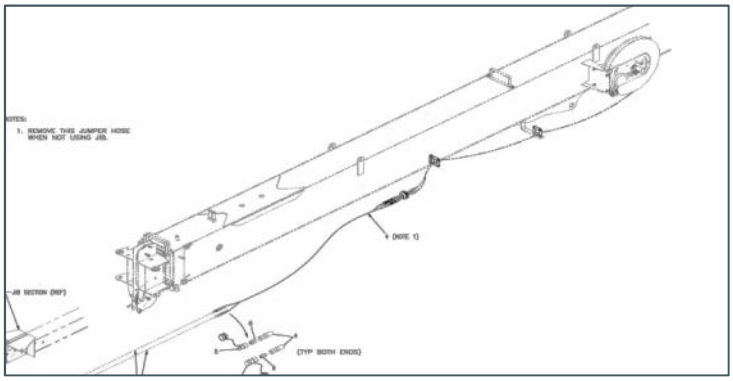

Products

For All Models

Reference LS# & Documented Models

543566-(NBT30H), 543689-(NBT50), 303453-(TMS700E07),

Jib Alignment Device

Description

An adjustment device that aids in aligning the jib to allow for ease in pinning.

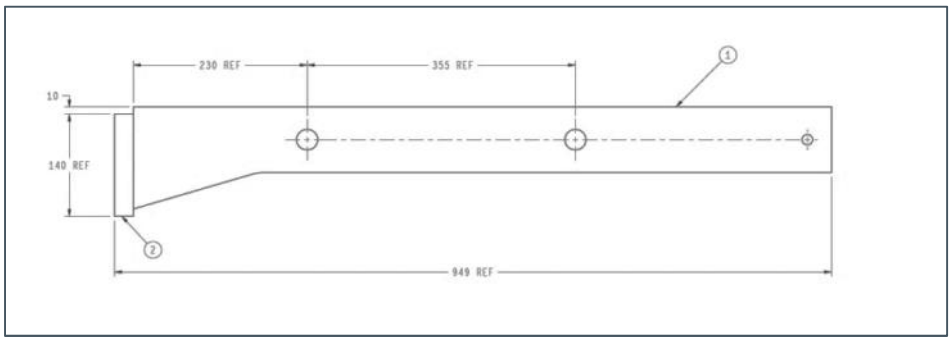

Products

RT & TMS

Reference LS# & Documented Models

542281-(TMS800E)

Note: Reference available kits page.

Language Translations Decals and Load Charts

Description

Language translations

Foreign Language Chart	
Part Number	Language
80013468	DE – German
80013469	DK – Danish
80013470	ES – Spanish
80013471	FR – French
80013472	IT – Italian
80013473	LT – Lithuanian
80013474	NL – Dutch
80013475	NO – Norwegian
80013476	PL – Polish
80013477	PC – Portuguese-Continental
80013478	PT – Portuguese-Brazilian
80013479	RU – Russian
800	SE – Swedish
80056446	TR – Turkish

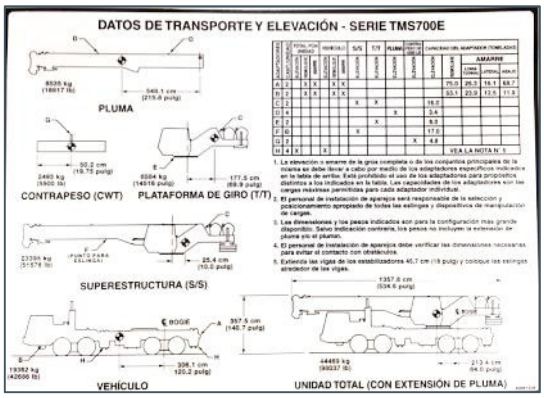

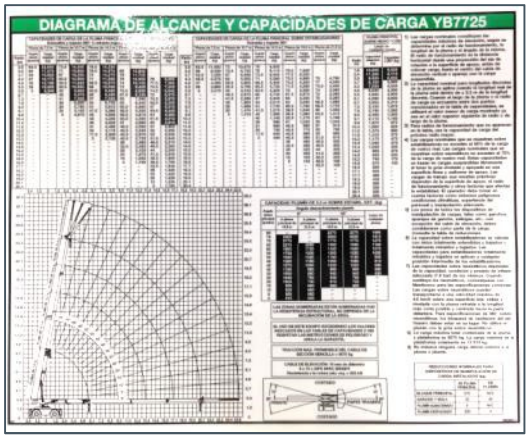

Products

For All Model Cranes

Reference LS# & Documented Models

544593-(RT765E-2), 305732-(YB4409E-2)

Light Tower Kit

Description

Light tower displaying a green/yellow/red light indication based upon percentage of rated capacity.

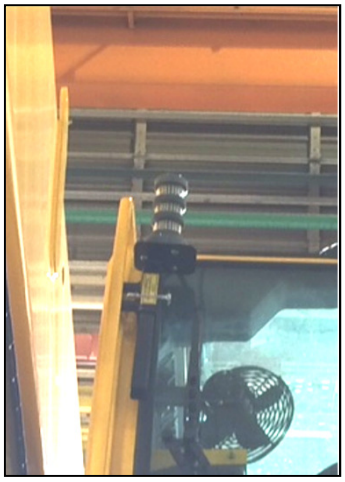

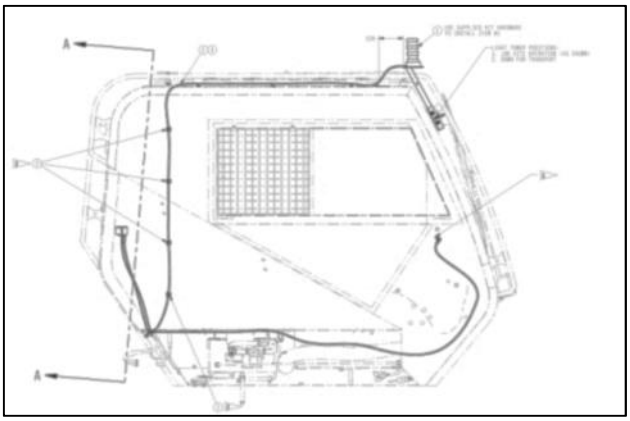

Products

For All Model Cranes

Reference LS# & Documented Models

544145 & 544947-(RT760E), 305729-(RT765E-2)

Note: Reference available kits page.

Main/Auxiliary Hoist Cameras

Description

Cameras allow the operator to view drums, load block and 180° opposite from the in-cab position of crane. Camera system can consist of multiple camera units displayed on a single LCD screen in the operator's cab.

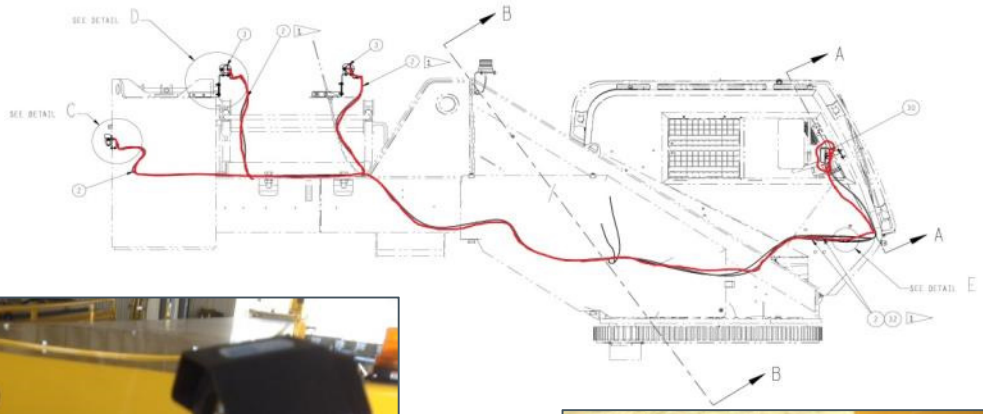

Products

For All Model Cranes

Reference LS# & Documented Models

546996-(RT530E), 545758-(RT650E), 546164-(RT765E-2), 545933-(RT880E), 306129-(RT9130E-2)

Note: Reference available kits page.

Cribbing Rack

Convenience * Safety * Time-saver

Products

Available for most Grove RT Models

Reference LS# & Documented Models

547909- (RT540E)

Tall Outrigger Jack Floats

Description

Extend the neck/collar of the floats to allow increased ground clearance.

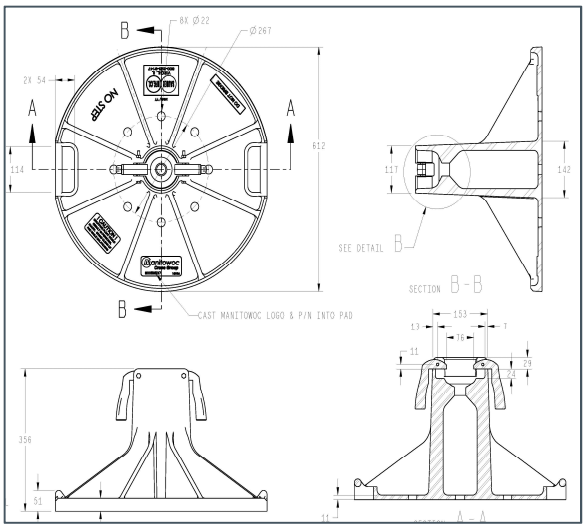

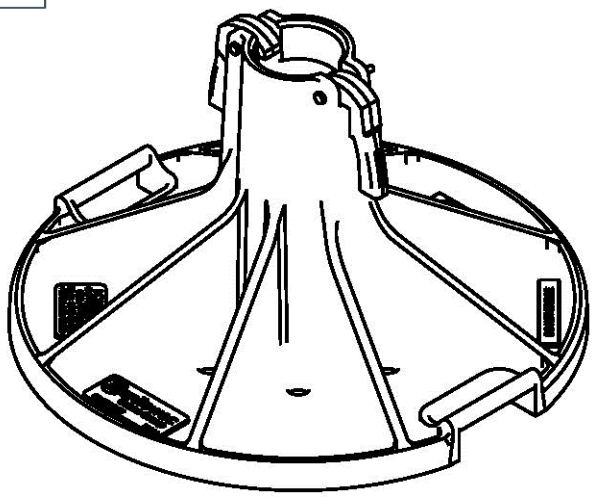

Products

RT / TMS/ Boom Truck

Reference LS# & Documented Models

547176-(RT990)

Note: Reference available kits page.

Pedestal Mounts

Description

Stationary mounting platform without outriggers for top deck and dock/pier application.

Products

Boom Truck

Reference LS# & Documented Models

306195-(400B), 306201-(500E2), 306124-(600E2), 545575-(1400H)

Pin-N-Go

Description

Designed for easy hookup and release. Reduces transport height, the weight of a trailer deck and there is no additional equipment required for hook up.

Products

RT / TMS

Reference LS# & Documented Models

545052-(RT700E), 544373-(RT9130E), 547381-(RT770E)

Pole Grab

Description

A hydraulically operated attachment used for positioning utility poles.

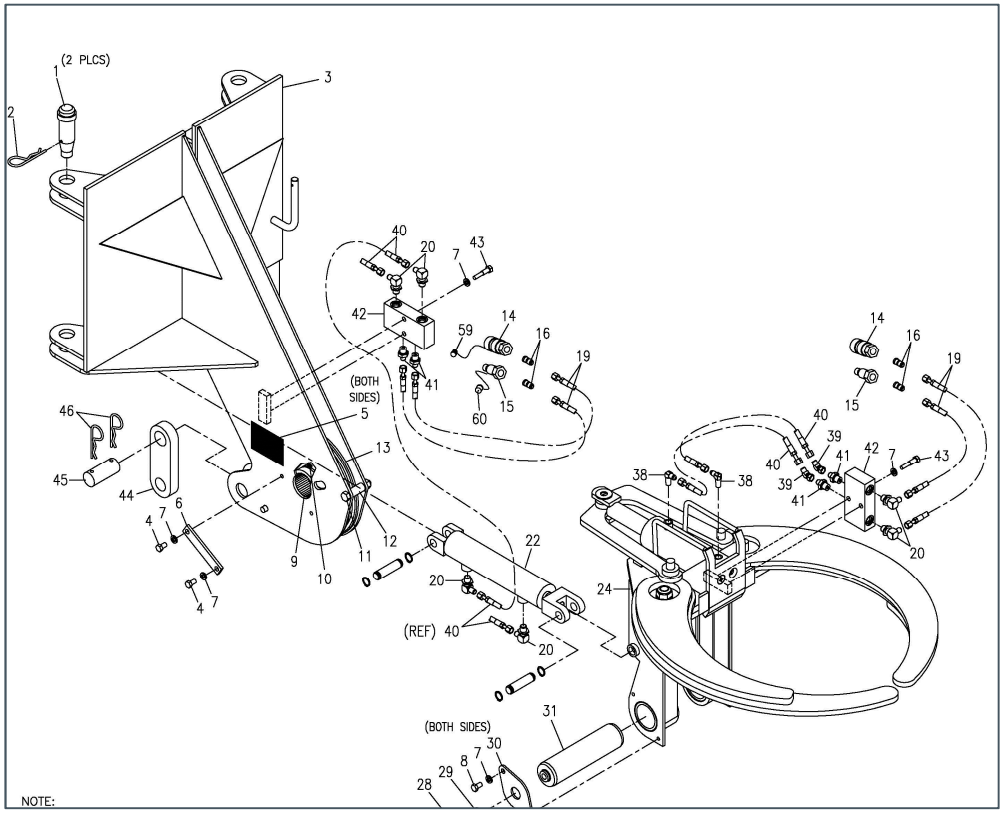

Products

Boom Truck

Reference LS# & Documented Models

306018-(800D)

Spark Arrestors

Description

Prevents exhaust from emitting sparks common in refinery and log forestry applications. Stainless steal tubing available.

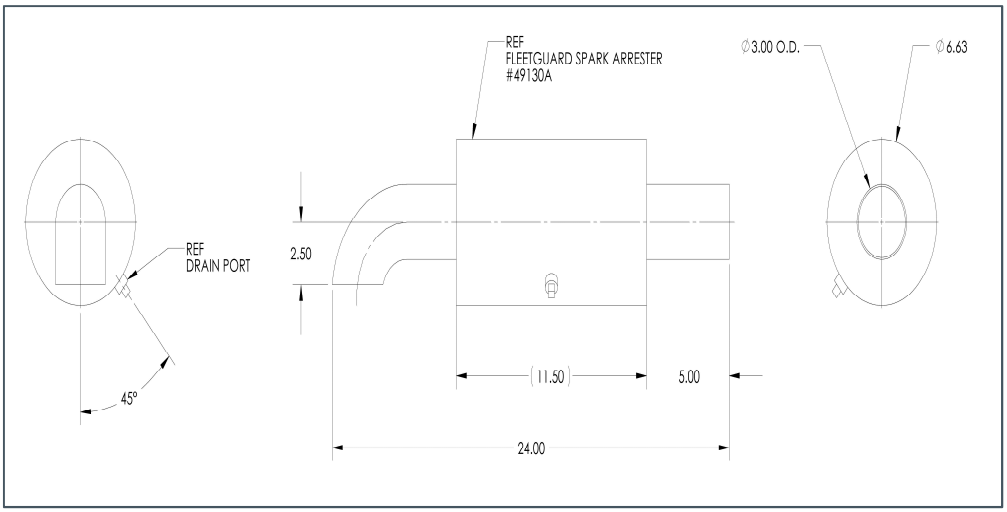

Products

For All Model Cranes

Reference LS# & Documented Models

543694-(RT765E-2), 306178-(RT9130E-2), 546184-(YB4411), 544882-(YB5515)

K100 Synthetic Crane Hoist Line

Reference LS# & Documented Models

YB/CD25, NBT40, NBT50, NBT60, RT530E-2, RT540E, RT600E, RT765E-2, RT770E, RT880E, RT890E, RT9130E-2, RT9150E, TMS700E, TMS800E, TMS9000E, GRT8100

Tag Axle

Description

Auxiliary axle installation to improve weight distribution to allow travel from state-to-state road restrictions and (FBL) Federal Bridge Laws.

Products

TMS / Boom Truck

Reference LS# & Documented Models

547388-(TMS700E), 542803-(TMS800E)

Tele Regen Kit

Description

Prevents boom drift due to cooling of hydraulic oil. The system automatically replenishes the volume of hydraulic oil in the telescoping cylinders to account for any volume lost due to thermal contraction.

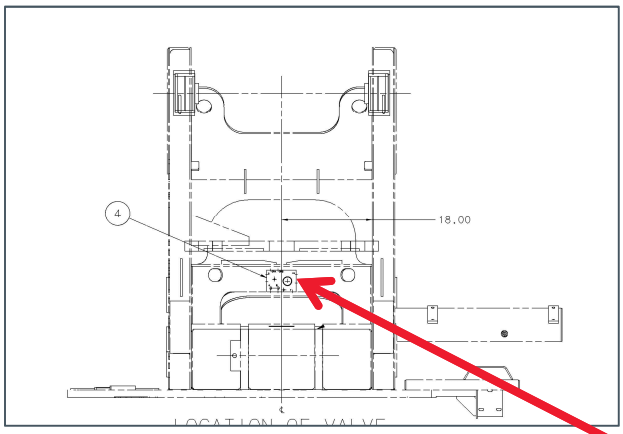

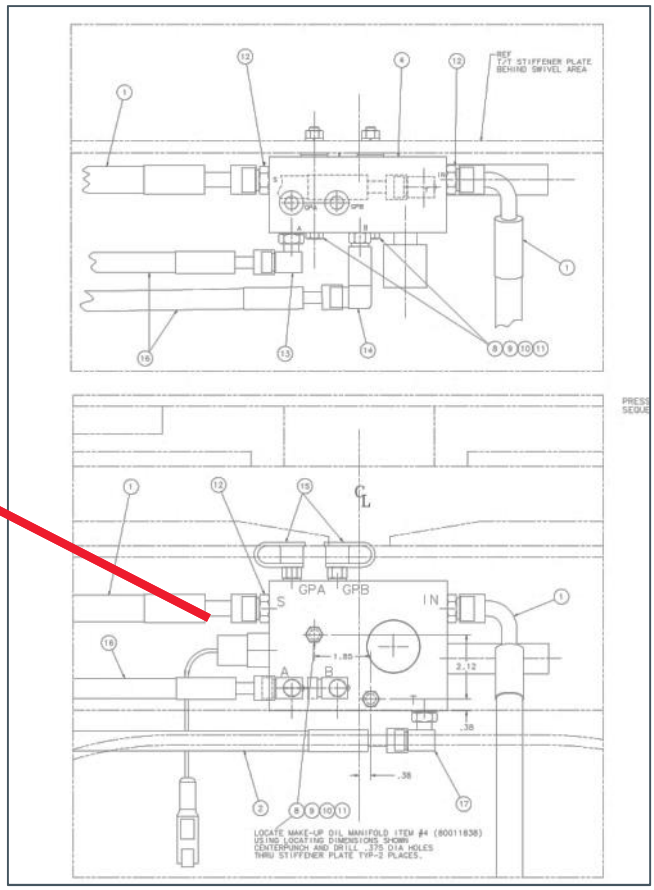

Products

RT / TMS

Reference LS# & Documented Models

546926-(RT530E), 547402-(RT600E), 543639-(RT9130E), 543396-(TMS760)

Note: Reference available kits page.

Tool Boxes/ Storage Solutions

Description

Custom designed solutions to keep mechanic or work truck tools organized, protected, and accessible.

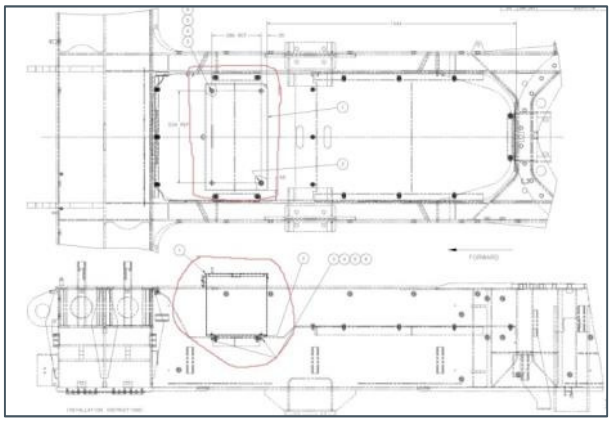

Products

For All Model Cranes

Reference LS# & Documented Models

305302-(RT530E-2), 304841-(RT540E), 305304-(RT650E)

Track Unit

Description

Boom Trucks mounted on tracks for navigating on rugged terrain.

Products

Boom Truck

Reference LS# & Documented Models

304315-(NBT33TU), 304890-(NBT33TU) 305786-(NBT45TU)

Wind Speed Indicator

Description

The wind is measured using anemometers that forward the wind speed to the monitor at operator's station inside cab.

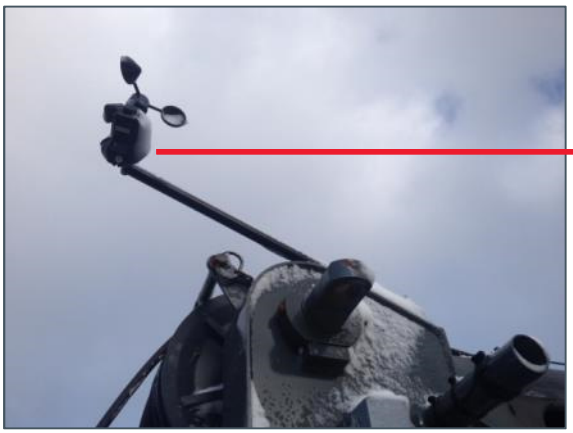

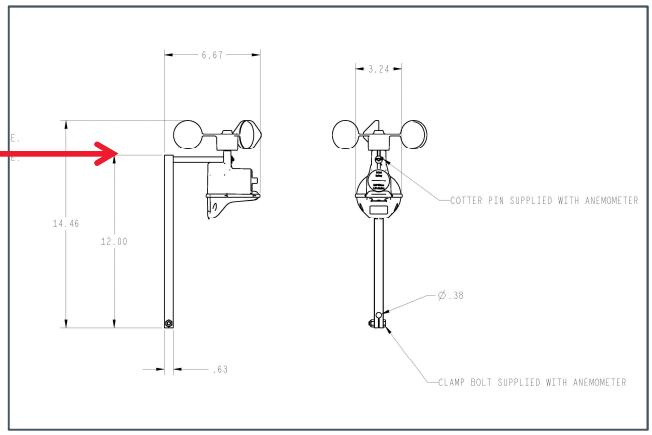

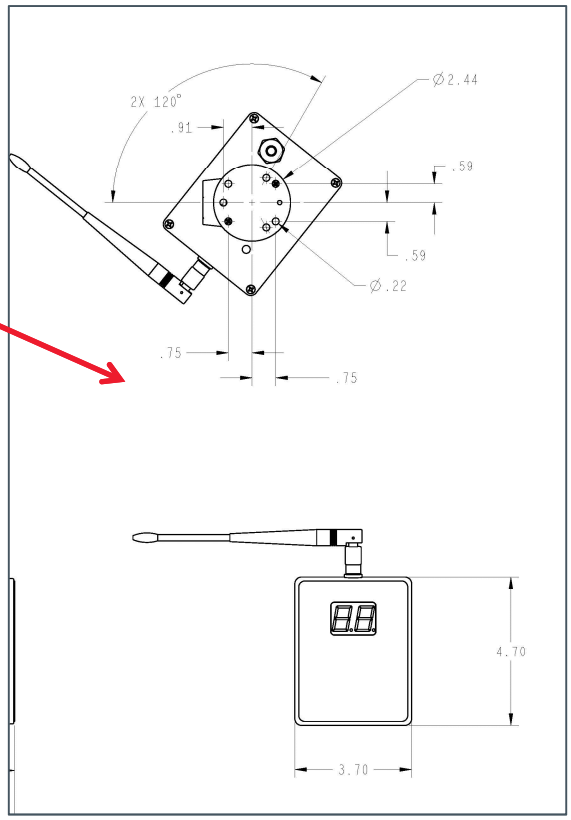

Products

For All Model Cranes

Reference LS# & Documented Models

547063 & 306120-(RT880E), 306115-(RT890E), 546380-(900A)

Note: Reference available kits page.

Work Area Definition System (WADS) with Limit Lockout

Description

Working range limiter with added electrical and hydraulic function lockouts.

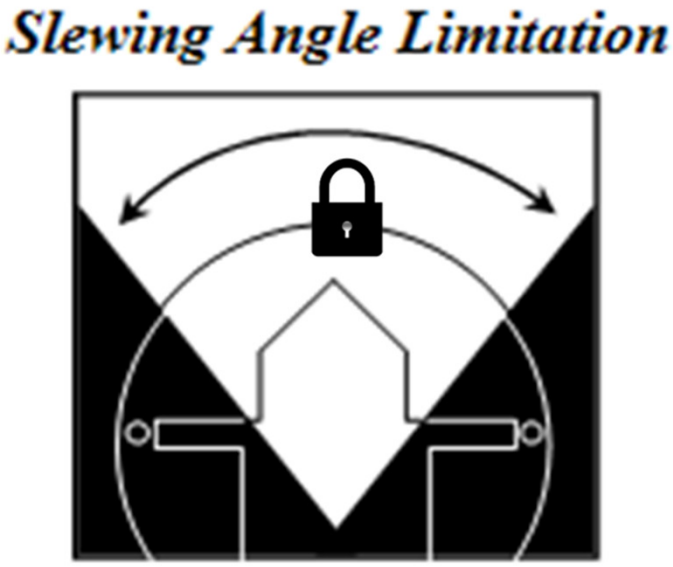

Products

Available for All Model Cranes

Reference LS# & Documented Models

547782-(RT530E-2), 547783-(RT765E-2), 547784-(RT880E)

Work Range Limiter

Description

A LMI program that sets virtual available boundaries for operator. The LMI will alert the operater when he/she has reached their boundaries/limits.

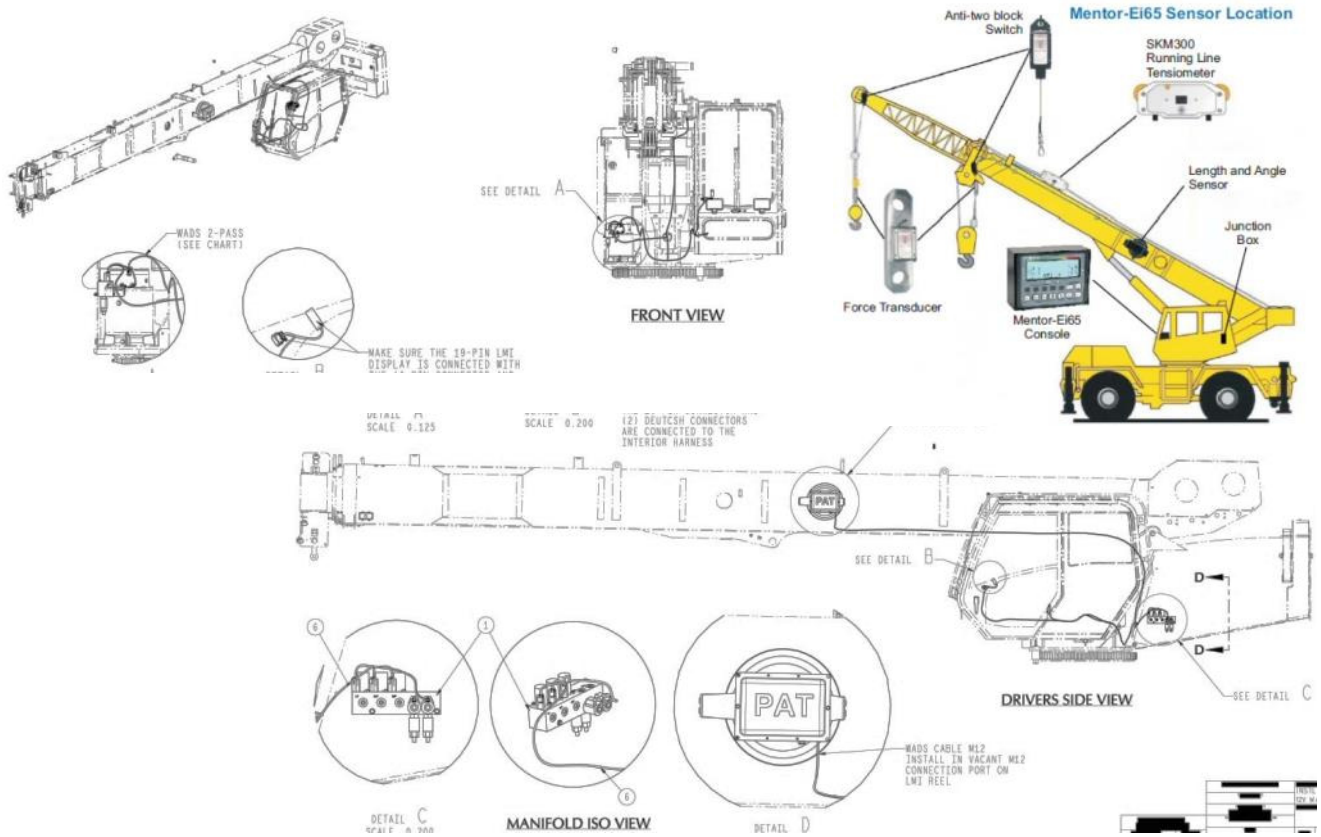

Products

For All Model Cranes

Reference LS# & Documented Models

304934-(RT650E), 546669-(NBT45)

Note: Reference available kits page.

Ready-To-Go Kits
(contact Crane Care for price and availability)

Products	Models	Materials #
Air & Fuel Intake Kit	RT/TMS/IND	80048051
Auto Lube Kit	All	80059155
Cold Weather Kit (Price list option)	All	80062942
Counterweight Split Configuration	All	80005385
D-Ring Attachment	All	80062814
Disable Trailing Boom	TMS	80065150
Electric Platform Pedal	Boom Truck	80062787
Hoist Camera Kit	All	80079191
Hook Block Modification	RT	80065172
Hydraulic Oil Cooler Kit	RT/IND	80061923
Interpolated Charts	RT	GA 24037
Jib Alignment Device	RT	80040859
Joystick Control Relocation	All	80065195
Light Tower Kit	All	80057204
Oil Temp. Light & Buzzer	All	80060985

Available Ready-To-Go Kits

Products	Models	Materials #
Outrigger Monitoring System (Price list option)	All	80033782
Q-Scale RCL Install	All	80069953
Red Dot A/C	RT	80060304
Safety Decals	All	80068587
Sound Reduction Kit	All	80063898
Swing Alarm Kit	RT	80059722
Tele Regen Kit	RT/TMS	9999103974
Wheel Chocks 105”x17”x14”x14”	All	90039067
Wheel Chocks 65”x15”x15”x11”	All	90039069
Wheel Chocks 46”x21”x11-1/4”x12-1/4”	All	90039068
Wind Speed Indicator Kit	All	80078931
Wireless A2B & LMI Mentor	Boom Truck	80065402
Work Range Limiter	All	9999104048

Contents of this publication are subject to change at any time.
The current copy is available on Manitowoc Direct/Lift Solutions page.